PoWer Plus Series

GeKaMac®

# PoWer Plus TIG 200 AC-DC PULSE PFC

## Manual Instructions

Please Read and Understand This Manual
Before Operating The Welding Machine

www.gedikwelding.com

This machine is for internal use only.

It complies with the WEEE Directive.

This machine has been designed in accordance with the EN 60974-1 and EN 60974-10 standards.

The machine is safe when installation, operation, and maintenance are performed in accordance with the user manual and regulations. The operator and machine owner are responsible for adhering to safety rules.

Gedik Kaynak San. Ve Tic. A.Ş. assumes no responsibility for safety or CE compliance if any modifications are made to the machine or if safety rules are not followed.

**This Class A equipment is not suitable for use in homes and similar residential areas where the power supply is provided by the low-voltage public electricity network.**

This machine is not household waste and cannot be disposed of in the trash.

When the machine reaches the end of its service life or becomes obsolete, it must be disposed of in accordance with regulations.

**COMPLIES WITH THE WEEE DIRECTIVE.**

**Eco Design Statement**

This machine has been designed and manufactured in accordance with the requirements of the 2009/125/EC Eco Design Directive concerning the environmentally friendly design of energy-related products.

Accordingly, machines with an idle mode are as follows.

| | **Idle Mode** |
|---|---|
| **MMA** | **X** |
| **MIG** | √ |
| **TIG** | √ |
| **Plazma** | √ |
| **SAW** | **Out of Scope** |

**Efficiency measurements should be conducted only on the power unit. The water cooling system should be disabled. For more information on measurements and machine settings, Gedik Kaynak Sanayi ve Ticaret A.Ş. should be consulted.**

**AT UYGUNLUK BEYANI**

**EU DECLARATION OF CONFORMITY**

Bu uygunluk beyanı yalnızca imalatçının sorumluluğu altında düzenlenir.

This declaration of conformity is issued under the sole responsibility of the manufacturer.

---

İstanbul, Turkey, 08.03.2024

**İmalatçı / Manufacturer**

GEDİK KAYNAK SANAYİ ve TİCARET A.Ş.

Ankara Cad. No.306 Seyhli Pendik ISTANBUL TURKIYE

| | |
|---|---|
| **Ürün / Product** | ARC WELDING MACHINE |
| **Marka-Model / Brand- Model** | PoWerPlus TIG 200 AC/DC PULSE PFC |

Yukarıda tanımlanan beyanın nesnesi ilgili uyumlaştırılmış AB mevzuatı ile uyumludur.

The object of the declaration described above, is in conformity with the relevant union harmonisation legislation.

**Direktifler / Directives** 2014/30/EU & 2014/35/EU & 2009/125/EC

Uyumlaştırılmış standartlar ve uygunluğun deklare edilmesiyle ilişkili diğer referanslar.

References to the relevant harmonised standarts used and references to the other technical specifications in relation to which conformity is declared.

EN IEC 60974-1:2018-A1:2019
EN IEC 60974-10:2021

Bu ekipman, talimatlara uygun kurulduğunda, bakımı yapıldığında ve kullanıldığında belirtilen standartlara uygundur. Makine üzerinde bir değişiklik yapıldığında veya yanlış kullanımda deklarasyon geçersiz olur.

The equipment is in compliance with pertinent legislation when installed, utilized, and maintained in accordance with the enclosed instructions. This declaration will be invalid under any modification or improper use.

**İmalatçı Adına imzalayan / Signed for and on behalf of:**

Hatice Özel, Equipment Business Unit Director

# Attention!

**Our Valued Customer,**

We kindly request that you obey the warnings mentioned below:

- Definitely have the “Warranty Document” approved when you get the machine.
- Use the machine in a way that is in accordance with the fundamentals that are mentioned in the user’s guide of the machine.
- Refer to the nearest GEDIK WELDING authorized service or the service center of GEDIK WELDING when a problem comes up.

Thank you for prefering one of GeKaMac® products.

## INDEX

Page


**1. Index** ..... 2

**2. Safety Rules** ..... 3

**2.1. Electrical Shock** ..... 3

**2.2. Arc Rays** ..... 3

**2.3. Gases and Fumes** ..... 3

**2.4. Welding Sparks** ..... 3

**2.5. Electricity and Magnetism** ..... 4

**3. Electromagnetic Compatibility (EMC)** ..... 4

**4. General Information and Warnings** ..... 5

**5. Advantages and General Properties of PoWer Plus+TIG 200 AC/DC Pulse PFC** ..... 6

**6. Working Principle of PoWer Plus+TIG 200 AC/DC Pulse PFC** ..... 8

**7. Technical information** ..... 9

**8. Duty Cycle & Over Heat** ..... 9

**9. Control Panel** ..... 10

**10. Assembling the Equipment (TIG)** ..... 11

**11. Layout for Front & Rear Panel** ..... 12

**12. Welding Operation** ..... 13

**13. Welding Parameters** ..... 14

**14. Machine Maintenance** ..... 14

**15. Troubleshooting** ..... 15

**16. Pedal Switch Kontrol** ..... 17

**17. Electrical Principle Drawing** ..... 18

**18. Warranty Conditions** ..... 19

**19. Warranty Document** ..... 20

## 2. SAFETY RULES

Protect yourself and others against possible serious injury or death risks. Keep children away. People who have pacemakers in their bodies should consult their doctors before operating the welding machine. Be careful when you are doing operations with your hands on the pieces. Use proper equipment that are necessarry to protect yourself from burns that can be caused by excessive heating of the piece during welding and / or cutting operation. Be sure that all set up, maintenance and repair related operations are performed only by qualified people.

### 2.1. ELECTRICAL SHOCK

Electrode and the piece that is being worked on or ground circuits are active in terms of electricity while the welding machine is on. Don't touch these active parts with bare hands or wet clothing. Wear dry gloves that have no holes to insulate your hands.

### 2.2. ARC RAYS

Use a protective mask with a proper filter to protect your eyes from the sparks and the rays of the arc while welding or watching such an actitivity. The head mask and the filtered glasses must meet the ANSI Z87.I standards.

### 2.3. GASES AND FUMES

Fumes and gases that are harmful to health can form during the welding operation.

Do not inhale these gases or fumes. Keep your head out of the fumes while welding. Provide sufficient ventilation in the arc and / or use fume suction machines to keep fumes and gases out of the breathing area.

### 2.4. WELDING SPARKS

Put away elements that are fire hazards from the welding area. If this is not possible, cover these hazards to prevent welding sparks from starting a fire. Do not forget that welding sparks and hot materials coming from welding can go on to neighboring areas easily through small cracks and openings. Don't do welding near hydrolic lines. Always keep a fire extinguisher on hand.

## 2.5. ELECTRIC AND MAGNETISM

Electric flow that passes through a conductor causes Electric and Magnetic Fields (EMF) to be formed. Welding current creates EMF around welding cables and welding machines.

— EMF can ruin the operation of some pacemakers. For this reason, welders who have pacamakers in their bodies should consult their doctors before welding.

— Being exposed to EMF during welding, can cause other unknown health problems.

— Getting exposed to EMF will be minimized by paying attention to the following instructions:

- Guide electrode and chassis cables together.
- Never wrap electrode and chassis cables around your body.
- Do not place your body between the electrode and chassis cables.
- Connect the chassis cable as close to the piece that is being worked on as possible.
- Stay as far away as you can from the power units.

## 3. ELECTROMAGNETIC COMPATIBILITY (EMC)

This machine has been designed in accordance with all related regulations and norms. Additionally, it can still generate electromagnetic forces that affect other systems such as communications (telephone, radio, television). These affects can cause security problems in the exposed systems. Read carefully and understand this section in order to reduce or get rid of the affects that can be created by this machine.

This machine has been designed to be operated in the industry area. If it is operated in private places (house etc.), it will become necessary to take special precautionary measures in order to prevent possible electromagnetic affects. It is necessary for the user to set up and operate these machines just like the way it is described in the handbook. If an electromagnetic affect is perceived due to the operation of these machines, the user should take corrective measures in order to get rid of these affects. If necessary, the user should contact GEDIK WELDING IND. COM. LTD. CO. No changes should be made in the machine without getting written approval from GEDIK WELDING IND. COM. LTD. CO.

The control of the work area should be made in terms of tools that can work improperly due to the electromagnetic affects before the machine is assembled.

- Inlet and outlet cables, telephone cables and control cables that are found in the work area of the machine.
- Radio and/or television transmitters and receivers,

## 3. ELECTROMAGNETIC COMPATIBILITY (EMC) (Continuing)

- Computer or computer controlled tools,
- Safety and control equipment for industrial operations,
- Calibration and measurement appliances,
- Medical appliances such as heart rhtyme appliance and hearing aids,

Control the electromagnetic immunity of the equipments that operate near the work area. The user should be certain that all the equipments that are in the work place are compatible. Otherwise, it can necessitate additional protective measures.

Ideal dimensions of the work place are determined by the construction of the area and other factors that are found there. Take the warnings below into consideration in order to decrease the affects of the electromagnetic waves that the machine generates:

* Make the connection of the machine with the network electricity in the way it is stated in the user's guide. If an electromagnetic interaction comes into being, such preventive measures as filtring the main electrical inlet may need to be taken.

* Outlet cables should be as short as possible and should be kept together.

## 4. GENERAL INFORMATION AND WARNINGS

Do not set up, operate or repair before reading the user's guide and the security measures that are found in it. Hide this user's guide and always have it on hand.

- Cut off the electrical connection between the welding machine and the network when the work is finished or when you are going to take a long break.

- Do not make any changes in the welding machine. This operation can cause the machine to lose its properties and a change in technical data.

- It is forbidden to do adaptation on the welding machine. Doing adaptation does not only cause the loss of warranty rights, but also can jeopardize the operational safety of the machine and can create the risk of electrocution for the users.

- A damage in the welding machine due to a mistake of the user will cause the loss of warranty rights.

- Acceptable environmental temperature range during work is between -10 °C and +40 °C.

- Acceptable relative humidity rate is 95% at 20 °C.

- Manufacturing company reserves the right to change the technical properties without prior notice.

## 5. ADVANTAGES AND GENERAL PROPERTIES OF PoWer Plus+TIG 200 AC/DC PULSE PFC

PoWer Plus+TIG 200 AC/DC Pulse PFC welding machine adopts the latest pulse width modulation (PWM) technology and insulated gate bipolar transistor (IGBT) power module, which can change work frequency to medium frequency so as to replace the traditional hulking work frequency transformer with the cabinet medium frequency transformer. Thus, it is characterized with portable, small size, light weight, low consumption and etc.

The parameters of machine on the front panel all can be adjusted continuously and steplessly, such as start current, crater arc current, welding current, base current, duty ratio, upslope time, downslope time, pre-gas, post-gas, pulse frequency, AC frequency, balance, hot start, arc force and arc length etc. When welding, it takes high frequency and high voltage for arc igniting to ensure the success ratio of igniting arc.

- **MCU control system, responds immediately to any changes.**
- **High frequency and high voltage for arc igniting to ensure the success ratio of igniting arc, the reverse polarity ignition ensures good ignition behavior in TIG-AC welding.**
- **Avoid AC arc-break with special means, even if arc-break occurs the HF will keep the arc stable.**
- **Pedal control the welding current.**
- **TIG/DC operation,If the tungesten electrode touches the workpiece when welding, the current will drop to short-circuit current to protect tungsten.**
- **Intelligent protection: over-voltage, over-current, over-heat, when the problems listed before occurred, the alarm lamp on the front panel will be on and the output current will be cut off. It can self-protect and prolong the using life.**
- **Double purposes : AC inverter TIG/MMA and DC inverter TIG/MMA, Excellent performance on Al-alloy, carbon steel, stainless steel, titanium.**

According to choosing the front panel functions, the following six welding ways can be realized.

- DC MMA
- DC TIG
- DC Pulse TIG
- AC MMA
- AC TIG
- AC Pulse TIG

**1.** For DC MMA, polarity connection can be chosen according to different electrodes

**2.** For AC MMA, magnetic flow caused by invariable DC polarity can be avoided ;

more welding current, narrow and deep weld;

## 5. ADVANTAGES AND GENERAL PROPERTIES OF PoWer Plus+TIG 200 AC/DC Pulse PFC (Continuing)

**3.** For DC TIG, DCEP is used normally (workpiece connected to positive polarity, while torch connected to negative polarity). This connection has many characters, such as stable welding arc, low tungsten pole loss,

**4.** For AC TIG (rectangle wave), arc is more stable than Sine AC TIG. At the same time, you can not only obtain the max penetration and the min tungsten pole loss, but also obtain better clearance effect.

**5.** DC Pulsed TIG has the following characters:

**1)** Pulse heating. Metal in Molten pool has short time on high temperature status and freezes quickly, which can reduce the possibility to produce hot crack of the materials with thermal sensitivity.

**2)** The workpiece gets little heat. Arc energy is focused. Be suitable for thin sheet and super thin sheet welding.

**3)** Exactly control heat input and the size of the molten pool. The depth of penetration is even. Be suitable for welding by one side and forming by two sides and all position welding for pipe.

**4)** High frequency arc can make metal for microlite fabric, eliminate blowhole and improve the mechanical performance of the joint.

**5)** High frequency arc is suitable for high welding speed to improve the productivity.

PoWer Plus+TIG 200 AC/DC Pulse PFC welding machine is suitable for all positions welding for various plates made of stainless steel, carbon steel, alloyed steel, titanium, aluminium, magnesium, cuprum, etc, which is also applied to pipe installment, mould mend, petrochemical, architecture decoration, car repair, bicycle, handicraft and common manufacture.

MMA——Manual Metal Arc welding;

PWM——Pulse-Width Modulation;

IGBT——Insulation Gate Bipolar Transistor

TIG——Tungsten Insert Gas welding

## 6. WORKING PRINCIPLE OF PoWer Plus+TIG 200 AC/DC PULSE PFC

The working principle of welding machines is shown as the following figure. Single-phase 220V work frequency AC is rectified into DC (about 312V), then is converted to medium frequency AC (about 20 KHz) by inverter device (IGBT module), after reducing voltage by medium transformer (the main transformer) and rectifying by medium frequency rectifier (fast recovery diodes), then is outputted DC or AC by selecting IGBT module. The circuit adopts current feedback control technology to insure current output stably. Meanwhile, the welding current parameter can be adjusted continuously and steplessly to meet with the requirements of welding craft.

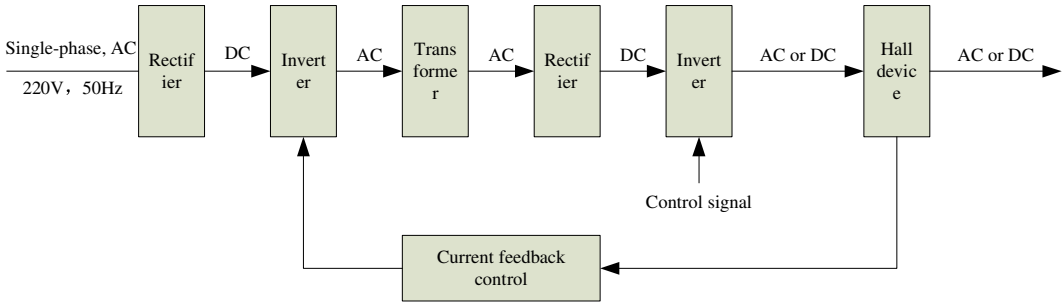


### Volt-Ampere Characteristic:

$I_2 \leq 600A$, $U_2 = 10 + 0.04\, I_2$ (V)

$I_2 > 600A$, $U_2 = 34V$

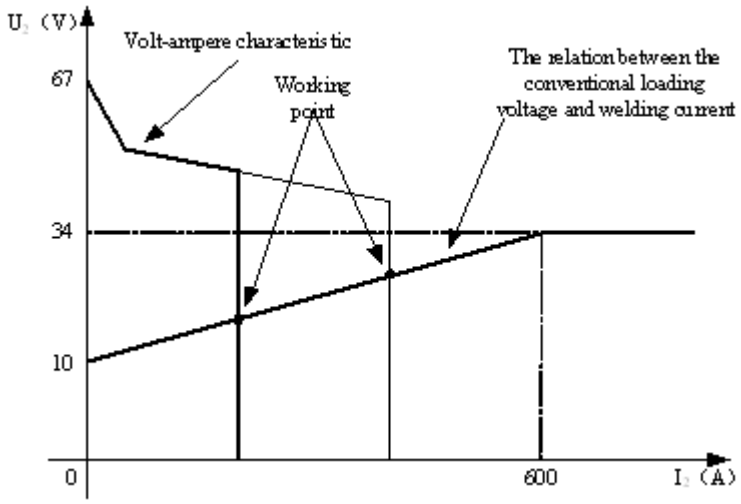

## 7. TECHNICAL INFORMATION

| Models / Parameters | PoWer Plus+TIG 200 AC/DC Pulse PFC | | | |
|---|---|---|---|---|
| Input power | 1~220±10%, 50Hz | | | |
| Rated input current（A） | 20/18（AC/DC TIG） | | 30/27（AC/DC MMA） | |
| Rated input power（KW） | 4.5/3.9（AC/DC TIG） | | 7/5.7（AC/DC MMA） | |
| Power factor | 0.99 | | | |
| Max-no-load voltage(V) | 67 | | | |
| Adjustment range of start current（A） | TIG | | MMA | |
| | AC | DC | AC | DC |
| | 5～welding current | 5～welding current | —— | —— |
| Adjustment range of welding current（A） | 10～200 | 5～200 | 10～170 | 5～170 |
| Adjustment range of downslope time（S） | 0～10 | | | |
| Pre-gas time（S） | 0.1~2 | | | |
| Adjustment range of post-gas time（S） | 0～10 | | | |
| Clearance effect（%） | 20～50 | | | |
| Efficiency Duty cycle（40℃, 10 minutes） | AC | DC | AC | DC |
| | 40% 200A | 35% 200A | 30% 130A | 30% 160A |
| | 60% 165A | 60% 155A | 60% 95A | |
| | 100% 130A | 100% 120A | 100% 70A | 100% 125A |
| Protection class | IP23 | | | |
| Insulation class | H | | | |
| Dimensions of Machine（L×W×H）（mm） | 510×190×340 | | | |
| Weight(Kg) | 14,5 | | | |

## 8. Duty Cycle & Over Heat

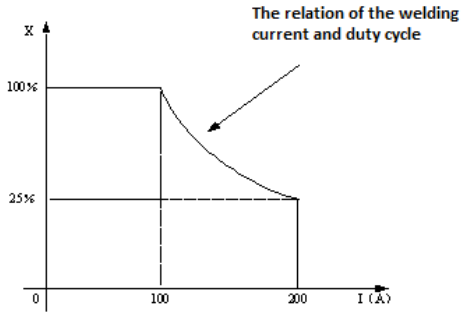


The letter “X” stands for duty cycle, which is defined as the proportion of the time that a machine can work continuously within a certain time (10 minutes). The rated duty cycle means the proportion of the time that a machine can work continuously within 10 minutes when it outputs the rated welding current.

The relation between the duty cycle “X” and the output welding current “I” is shown as the right figure.

If the welder is over-heat, the IGBT over-heat protection unit inside it will output an instruction to cut output welding current, and brighten the over-heat pilot lamp on the front panel. At this time, the machine should be relaxed for 15 minutes to cool the fan. When operating the machine again, the welding output current or the duty cycle should be reduced.

## 9. CONTROL PANEL

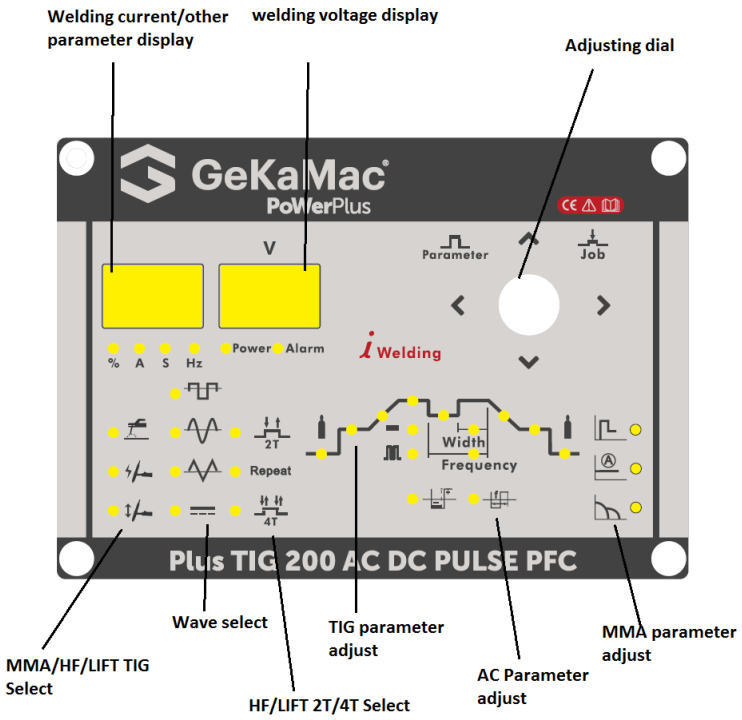


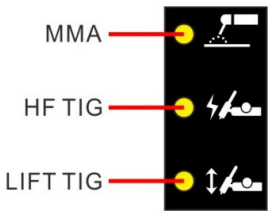


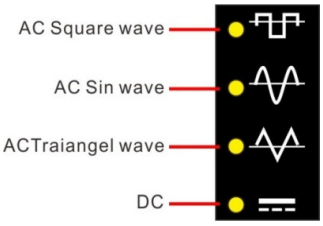


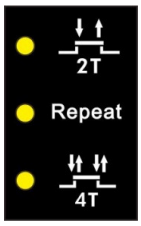


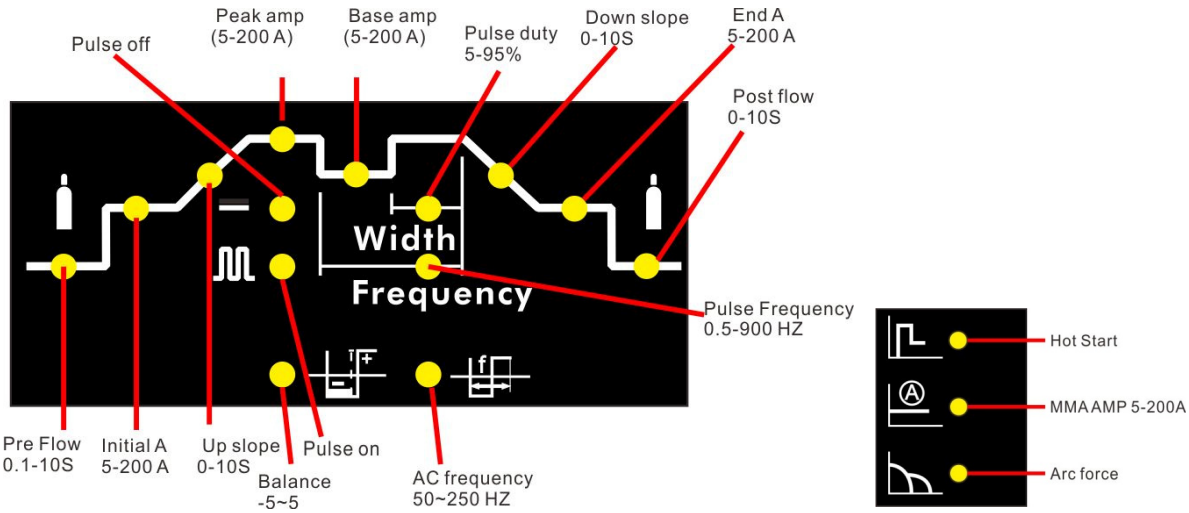

## 10. ASSEMBLING THE EQUIPMENT (TIG)

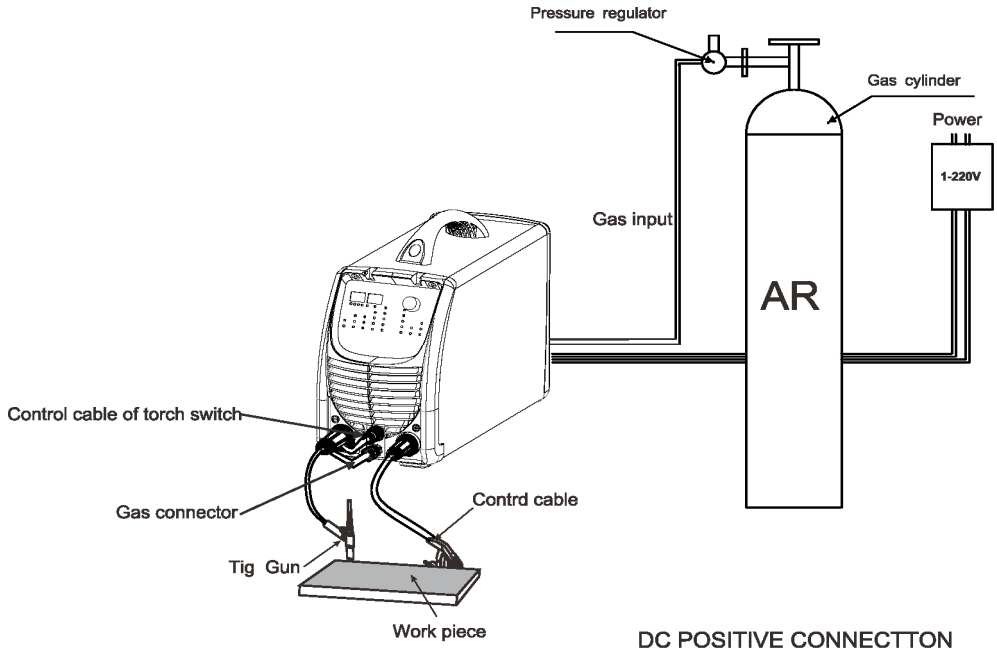


- Workpiece is connected to the positive electrode of welding machine, and welding torch is connected to the negative electrode, which is called DC POSITIVE CONNECTION; otherwise, that is called DC NEGATIVE CONNECTION. Generally, it is usually operated in DC POSITIVE CONNECTION in TIG welding mode.

- The control cable of torch switch consists of 2 wires, pedal control of 3 wires and the aero socket has 14 leads.

- Consumable parts for TIG torch, such as tungsten electrode, tip, gas nozzle, electrode shield(short/long) , please enquire us by mail or phone according to the accessory codes.

- When WSME welding machines are operated in HF ignition method, the ignition spark can cause interferences in equipment near the welding machine. Be sure to take specially safety precautions or shielding measures.

## 11. LAYOUT FOR FRONT & REAR PANEL

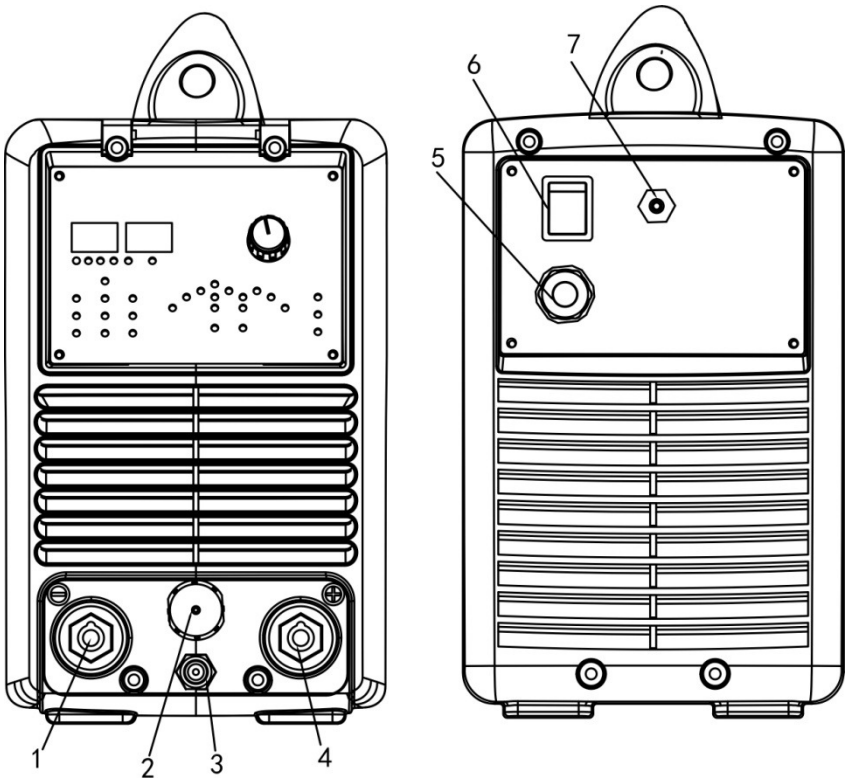


1 **Negative output** The welder's negative polarity output.

2 **Shield gas connector** Is connected to the gas input pipe of torch.

3 **Aero socket** Is connected to torch switch control wire.

4 **Positive output** The welder's positive polarity output.

5 **Water box connector** Is connected to the water box

6 **Power source switch** Switch to "ON", the welder is turned on, while switch to "OFF", the welder is turned off.

7 **Power source input** To connect power source.

8 **Shield gas input join** To connect one head of the gas hose while the other head of which is connected to argon gas cylinder.

## 12. WELDING OPERATION

**Knocking Arc:** Take the electrode upright to touch the workpiece, after forming short circuit, quickly lift up about 2~4 mm, and arc will be ignited. This method is difficult to master. But in the welding for the brittle or hard steel, it is better to use knocking way.

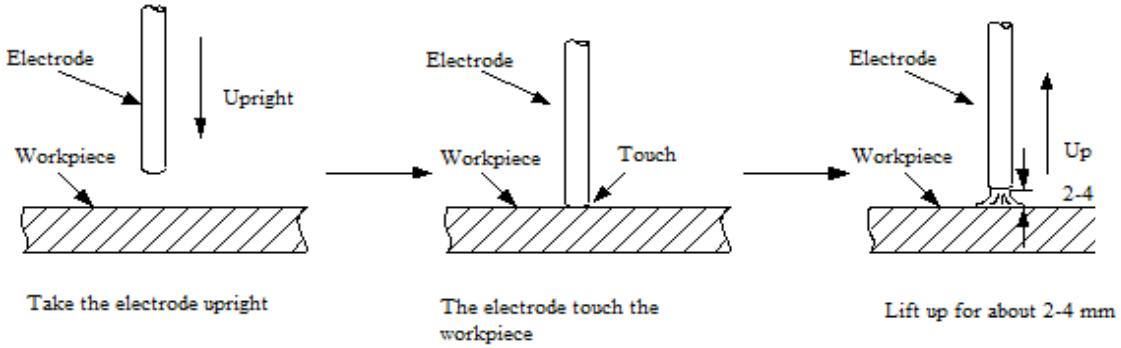


**Lifting Arc:** take the electrode to scrape the workpiece for striking arc. But it may cause the arc scratch, so must to lift arc in the groove.

**Manipulation of Electrode**

In MMA welding, there are three motions to being matched in the end of electrode: the electrode moving to the molten pool along axes; the electrode swing right and left; the electrode moving along welding way.

The operator can choose the manipulation of electrode based on

welding joint shape, welding position, electrode spec, welding

current and operation skill, etc.

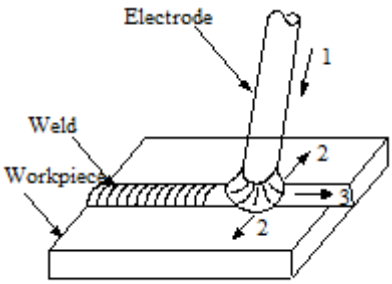

## 13. WELDING PARAMETERS

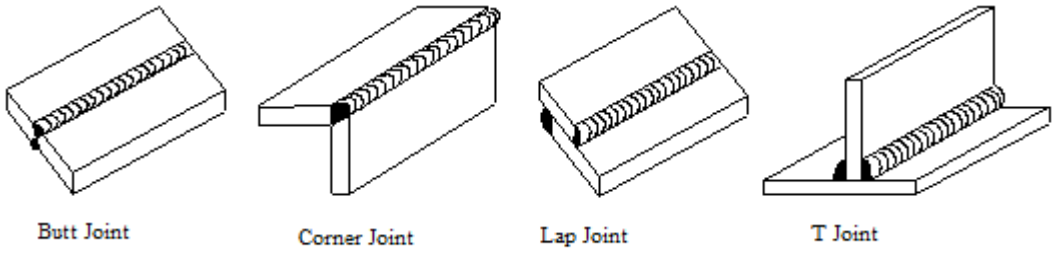


## 14. MACHINE MAINTENANCE

In order to guarantee that arc welding machine works high-efficiently and in safety, it must be maintained regularly. Let customers understand the maintenance methods and means of arc welding machine more , enable customers to carry on simple examination and safeguarding by oneself, try one's best to reduce the fault rate and repair times of arc welding machine, so as to lengthen service life of arc welding machine .Maintenance items in detail are in the following table.

● **Warning: For safety while maintaining the machine, please shut off the supply power and wait for 3 minutes, until capacity voltage already drops to safe voltage 36V.**

| Date | Maintenance item |
|---|---|
| Daily examination | Observe that whether panel knob and switch in the front and at the back of arc welding machine are flexible and put correctly in place. If the knob has not been put correctly in place, please correct; If you can't correct or fix the knob , please replace immediately; |
| | If the switch is not flexible or it can't be put correctly in place, please replace immediately; Please get in touch with maintenance service department if there are no accessories. |
| | After turn-on power, watch/listen to that whether the arc welding machine has shaking, whistle calling or peculiar smell. If there is one of the above problems, find out the reason to get rid of; if you can't find out the reason, Please contact local this area agent or the branch company. |
| | Observe that whether the display value of LED is intact. If the display number is not intact, please replace the damaged LED. If it still doesn't work, please maintain or replace the display PCB. |
| | Observe that whether the min/max value on LED accords with the set value. If there is any difference and it has affected the normal welding craft, please adjust it. |
| | Check up that Whether fan is damaged and is normal to rotate or control. If the fan is damaged, please change immediately. If the fan does not rotate after the arc welding machine is overheated , observe that whether there is something blocked in the blade, if it is blocked, please get rid of ; If the fan does not rotate after getting rid of the above problems, you can poke the blade by the rotation direction of fan. If the fan rotates normally, the start capacity should be replaced ; If not, change the fan. |
| | Observe that whether the fast connector is loose or overheated. if the arc welding machine has the above problems, it should be fastened or changed. |
| | Observe that Whether the current output cable is damaged. If it is damaged, it should be wrapped up, insulated or changed. |

## 14. MACHINE MAINTENANCE (Continuing)

| Date | Maintenance item |
|---|---|
| Monthly examination | Using the dry compressed air to clear the inside of arc welding machine. Especially for clearing up the dusts on radiator, main voltage transformer, inductance, IGBT module, the fast recover diode and PCB, etc. |
| | Check up the bolt in arc welding machine, if it is loose, please screw down it. If it is skid, please replace. If it is rusty, please erase rust on bolt to ensure it works well. |
| Quarter- yearly examination | Whether the actual current accords with the displaying value. If they does not accord, they should be regulated. The actual current value can be measured by the adjusted plier-type ampere meter. |
| Yearly examination | Measure the insulating impedance among the main circuit, PCB and case, if it below 1MΩ, insulation is thought to be damaged and need to change , and need to change or strengthen insulation. |

## 15. TROUBLESHOOTING

- Before arc welding machines are dispatched from the factory, they have already been debugged accurately. So forbid anyone who is not authorized by our company to do any change to the equipment!
- Maintenance course must be operated carefully. If any wire becomes flexible or is misplaced, it maybe potential danger to user!
- Only professional maintenance personal who is authorized by our company could overhaul the machine!
- Guarantee to shut off the arc welding machine's power before turn on the outline of the equipment!
- If there is any problem and has no the authorized professional maintenance personal of our company, please contact local our company agent or the branch company!

| S/N | Troubles | Reasons | Solution |
|---|---|---|---|
| 1 | Turn on the power source, and fan works, but the power pilot lamp is not on. | The power light damaged or | Check and repair Pr7 |
| | | The transformer of power is broken | Repair or change the transformer |
| | | Control PCB failures | Repair or change the control Pr4 |
| 2 | Turn on the power source, and the power lamp is on, but fan doesn't work | There is something in the fan | Clear out |
| | | The start capacitor of fan | Change capacitor |
| | | The fan motor damaged | Change fan |
| 3 | Turn on the power source, the power lamp is not on, and fan doesn't work | No power supply input | Check whether there is power supply |
| | | The fuse inside the machine | Change it (3A) |

## 15. TROUBLESHOOTING (Continuing)

| S/N | Troubles | | Reasons | Solution |
|---|---|---|---|---|
| 4 | The number on the display is not | | The LED in the display is broken | Change the LED |
| 5 | The max and min value displayed doesn't accord with the set value. | | The max value is not accordant (refer to §3.1) | Adjust potentiometer Imin on the power board. |
| | | | The min value is not accordant (refer to §3.1) | Adjust potentiometer Imaxin the current meter. |
| 6 | No no-load voltage output (MMA) | | The machine is damaged | Check the main circuit and the Pr4. |
| 7 | Arc can not be ignited (TIG) | There is spark on the HF igniting board. | The welding cable is not connected with the two output of | Connect the welding cable to the welder's output. |
| | | | The welding cable damaged. | Repair or change it. |
| | | | The earth cable connected | Check the earth cable. |
| | | | The welding cable is too long. | Use an appropriate welding cable. |
| | | | There is oil or dust on the | Check and remove it. |
| | | | The distance between tungsten electrode and workpiece is too | Reduce the distance (about 3mm). |
| | | There is not spark on the HF igniting board. | The HF igniting board does not | Repair or change Pr8 |
| | | | The distance between the discharger is too short. | Adjust this distance (about 0.7mm). |
| | | | The malfunction of the welding gun switch. | Check the welding gun switch, control cable and aero socket. |
| 8 | No gas flow (TIG) | | Gas cylinder is close or gas pressure is low | Open or change the gas cylinder |
| | | | Something in the valve | Remove it |
| | | | Electromagnetic valve is damaged | Change it |
| 9 | Gas always flows | | The gas-test on the front panel is on | The gas-test on the front panel is off |
| | | | Something in the valve | Remove it |
| | | | Electromagnetic valve is damaged | Change it |
| | | | The adjustment knob of pre-gas | Repair or change it |
| 10 | The welding current can not be adjusted | | The welding current potentiometer on the front panel connection is | Repair or change the potentiometer |
| 11 | No AC output while selecting "AC" | | The power PCB is in trouble. | Repair or change it. |
| | | | The AC drive PCB damaged. | Change it. |
| | | | The AC IGBT module damaged. | Change it. |

## 15. TROUBLESHOOTING (Continuing)

| S/N | Troubles | Reasons | | Solution |
|---|---|---|---|---|
| 12 | The welding current displayed isn't accordant with the actual value. | The min value displayed isn't accordant with the actual value. | | Adjust potentiometer Imin on the power board. |
| | | The max value displayed isn't accordant with the actual value. | | Adjust potentiometer Imax on the power board. |
| 13 | The penetration of molten pool is not enough. | The welding current is adjusted | | Increase the welding current |
| | | The arc is too long in the welding | | Use 2T operation |
| 14 | The alarm lamp on the front panel is on | Over heat protection | Two much welding current | Reduce the welding current output |
| | | | Working time too long | Reduce the duty cycle (work intermittently) |
| | | Over-voltage protection | Power supply fluctuates | Using the stable power supply |
| | | Low-voltage protection | Power supply fluctuates | Using the stable power supply |
| | | | Too many machines using power supply in the same time | Reduce the machines using power supply in the same time |
| | | Over-current protection | Unusual current in the main circuit | Check and repair the main circuit and drive Pr6 |

## 16. PEDAL SWITCH KONTROL

When plug the fourteen-lead aero-socket of pedal switch in it. Welder will identify the pedal switch, the welding current knob on the front panel will can't use， and only 2T can be selected.

● When use the adjustment knob of max-welding current beside the pedal ,can set the max-current you want.

● The eighth and ninth of the fourteen-lead aero-socket is gun switch; The first and second of the fourteen-lead aero-socket is short circuit; The third、 fourth and fifth of the fourteen-lead aero-socket is pedal adjustable resistance.

Adjustment knob of welding current

Connected to the 12-lead aero socket on the front panel

Adjusting knob of max. current

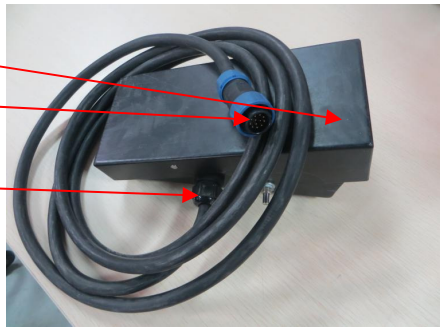

## 17. ELECTRICAL PRINCIBLE DRAWING

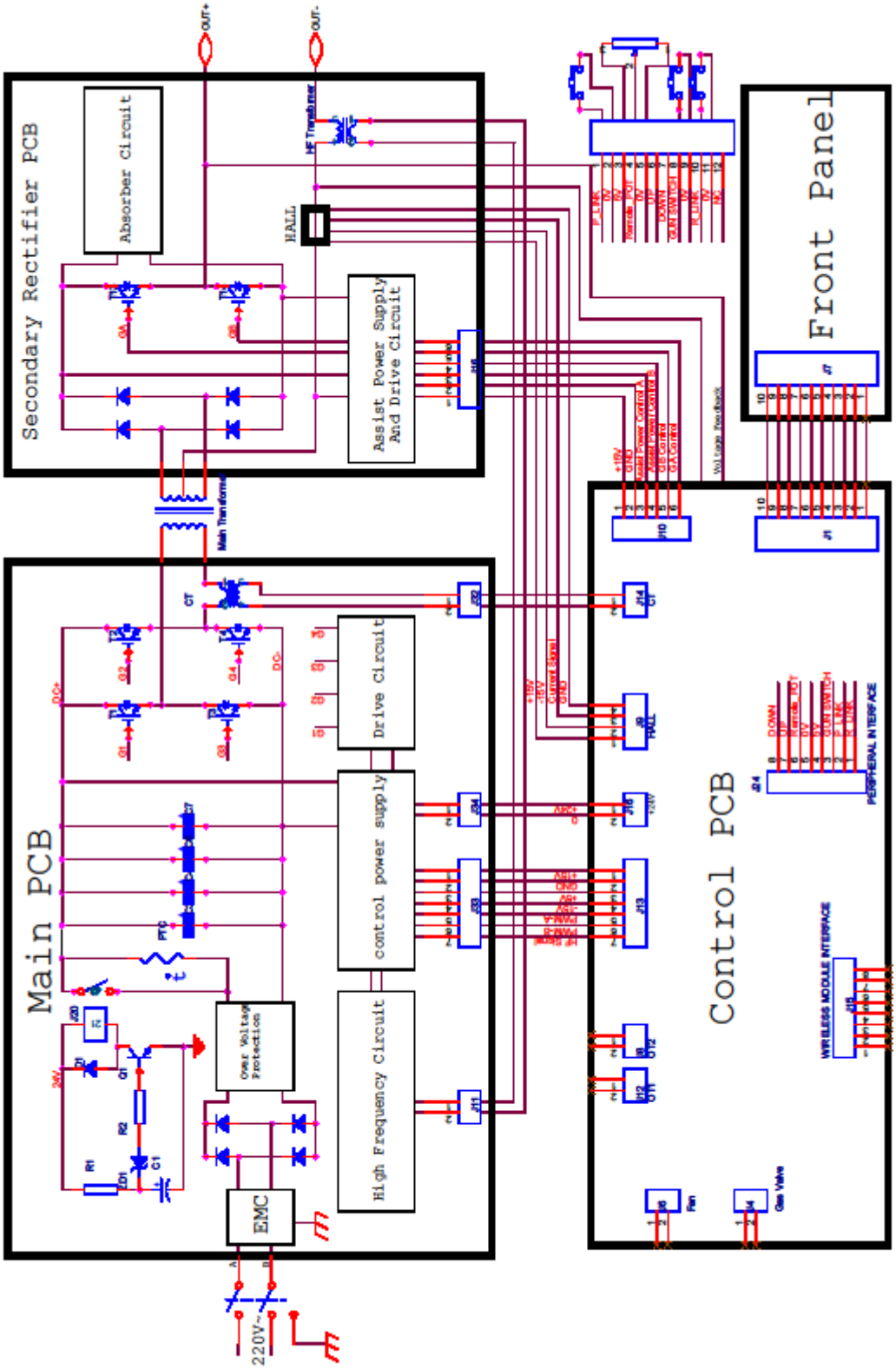

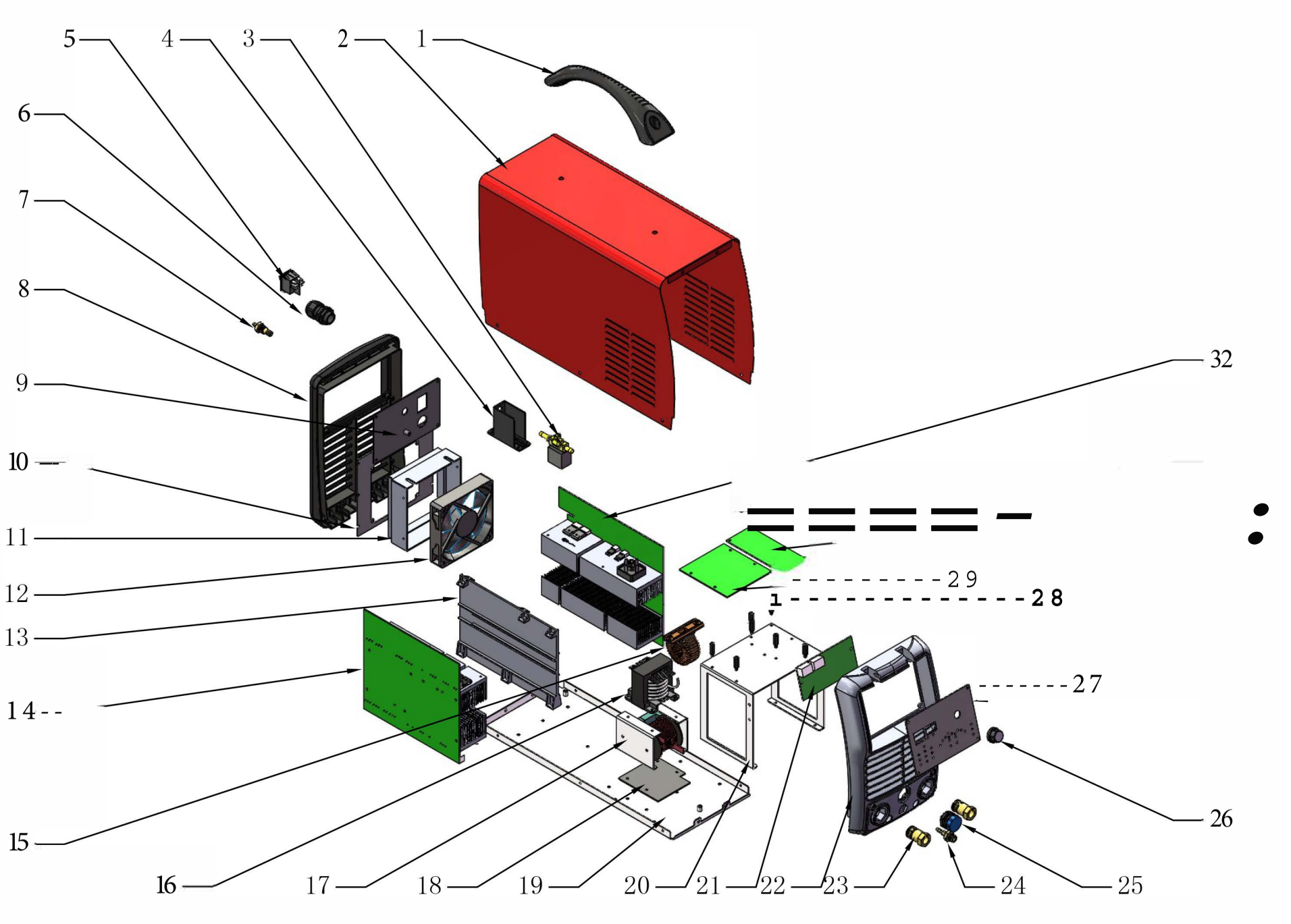
1
2
3
4
5
6
7
8
9
10
11
12
13
14
15
16
17
18
19
20
21
22
23
24
25
26
27
28
29
32

# PoWeR PLUS TIG 200 AC/DC PULSE

| No | Item code | SAP KODU | Description | Unit | QTY |
|---|---|---|---|---|---|
| 1 | 8.253RM.002 | 6064200069 | Handle | PCS | 1 |
| 2 | 8.301RM.557 | * | Cover | PCS | 1 |
| 3 | 7.253.051-A | 6064100120 | Solenoid valve | PCS | 1 |
| 4 | 8.123RM.923 | * | Air valve installation box | PCS | 1 |
| 5 | 7.232.739 | 6064100406 | switch (red) | PCS | 1 |
| 6 | 7.155.021 | * | External forced cable fixing clip | PCS | 1 |
| 7 | 8.462.116 | * | Quick connector | PCS | 1 |
| 8 | 8.068RM.945 | 6064200099 | Rear panel | PCS | 1 |
| 9 | 8.307RM.511 | * | Rear panel sealing plate | PCS | 1 |
| 10 | 8.122RM.511 | * | Fan installation plate | PCS | 1 |
| 11 | 8.304RM.002-A | 6064200002 | fan cover | PCS | 1 |
| 12 | 7.720.010-A | 6064100398 | Fan | PCS | 1 |
| 13 | 8.123RM.922-D | * | Support plate | PCS | 1 |
| 14 | W.423RM.285-1 | 6064000129 | MUR assembly | PCS | 1 |
| 15 | L.271RM.255 | * | PFC inductance | PCS | 1 |
| 16 | L.185RM.510 | 6064000318 | transformer | PCS | 1 |
| 17 | L.271RM.510-A | * | High frequency inductance | PCS | 1 |
| 18 | 8.123RM.242 | * | Inductive insulation board | PCS | 1 |
| 19 | 8.055RM.557 | * | Base board | PCS | 1 |
| 20 | 8.123RM.262-C | * | Support frame | PCS | 1 |
| 21 | W.496RM.385-A | 6064000119 | TIG front panel PCB | PCS | 1 |
| 22 | 8.069RM.990 | 6064200064 | front panel | PCS | 1 |
| 23 | 7.152.313-A | 6064200055 | Euro Quick connector | PCS | 2 |
| 24 | 8.462.028 | 6064200062 | Front air connector | PCS | 1 |
| 25 | 7.132.012-B | 6064100570 | 12-pin aviation socket | PCS | 1 |
| 26 | 7.458.505 | * | knob | PCS | 1 |
| 27 | 8.306RM.557 | | Front panel sealing plate | PCS | 1 |
| 28 | 7.503.519-A | 6064100117 | Hexagonal isolation column | PCS | 8 |
| 29 | WP.496RM.312-D | 6064000172 | Control PCB board | PCS | 1 |
| 30 | W.496RM.A33-C-1 | 6064000149 | Power PCB board | PCS | 1 |
| 31 | W.496RM.901 | 6064000162 | PCBA, wireless circuit board | PCS | 1 |
| 32 | W.422RM.322-5 | * | IGBT assembly | PCS | 1 |

| 18. WARRANTY CONDITIONS |
| --- |
| 1. The length of the warranty starts on the date of delivery and it is for 1 year.<br><br>2. The whole merchandise including all its parts are covered by the warranty of our company.<br><br>3. If the merchandise breaks down within the length of the warranty, the time spent in the repair shop will be added to the length of the warranty. The length of repair of the merchandise is at the maximum 20 working days. This period of time starts on the date that the merchandise was delivered at one of the following locations: A service station or the seller of the merchandise or dealer or agency or representation office or importer or manufacturer, in this order if there are no service stations.<br><br>4. If the merchandise breaks down either due to material and workmanship or assembly lines within the length of the Warranty, it will be repaired without demanding any money under the name of expenditure of workmanship, the cost of the changed piece or under any other name.<br><br>5. Replacement operation will be done without charge in cases where the merchandise repeats the same fault more than twice or different faults come up more than four times within the length of the warranty, the length of the repair exceeds maximum necessary time and the determination of the unrepairability of the merchandise by a report that is prepared either by a service station or the seller or a dealer or an agency or a representation office or the importer or the manufacturer, in this order, if there are no service stations.<br><br>6. Faults that are results of misuse according to the user's guide of the merchandise are not covered by the warranty.<br><br>7. Ministry of Science Industry and Technology, The Protection of the Consumer and Competition General Directorate can be refered to whenever a problem concerning the warranty document comes up.<br><br>8. Earth clamp and welding kits are not under warranty. |

# GeKaMac®

# Gedik Welding Machines

## Warranty Document

**MACHINE INFORMATION**

Brand : GeKaMac®

Model : ……

Serial Number : ……

**CUSTOMER INFORMATION**

Company Name : ……

Authorized Person : ……

Telephone : ……

Company Address : ……

City/Country…… ……

E-Mail :…… @……

Signature /Cachet :

**SERVICE INFORMATION**

Authorized Service : ……

Service Staff : ……

Installation Date : ……/……/……

Warranty Starting Date : ……

Warranty Expiration Date : ……

Signature /Cachet :

# GeKaMac®

# Gedik Welding Machines

## Warranty Document

**MACHINE INFORMATION**

Brand : GeKaMac®

Model : ……

Serial Number : ……

**CUSTOMER INFORMATION**

Company Name : ……

Authorized Person : ……

Telephone : ……

Company Address : ……

City/Country…… ……

E-Mail :…… @……

Signature /Cachet :

**SERVICE INFORMATION**

Authorized Service : ……

Service Staff : ……

Installation Date : ……/……/……

Warranty Starting Date : ……

Warranty Expiration Date : ……

Signature /Cachet :

**Manufacturer:**
Company Name: Shanghai HI-ZONE Welding Equipment Manufacture Co.,Ltd.
Company adress: A-2nd Floor, No.99-3, Shenmei Road, Zhoupu, Pudong, Shanghai 201318 China
Contact Details: T: +86 21 31295500 | F: +86 21 51919711

**Importer:**
Gedik Kaynak San ve Tic A.Ş
Company Adress: Ankara Cad No: 306 Seyhli 34906 Pendik, Istanbul
TURKEY
Contact Details: +90 216 3785000

PoWer Plus Series

GeKaMac®

**Gedik Welding** Ankara Caddesi
No : 306 Şeyhli 34906 Pendik, İstanbul / Turkey
T +90 216 378 50 00 F +90 216 378 20 44
gedik@gedik.com.tr